This the new schematics of the Nmea2Wifi multiplexer which is identical to the previous ones except for: Resistors R3 R4 R5 and R6 now have the same value of 330R and consist on the array named R3

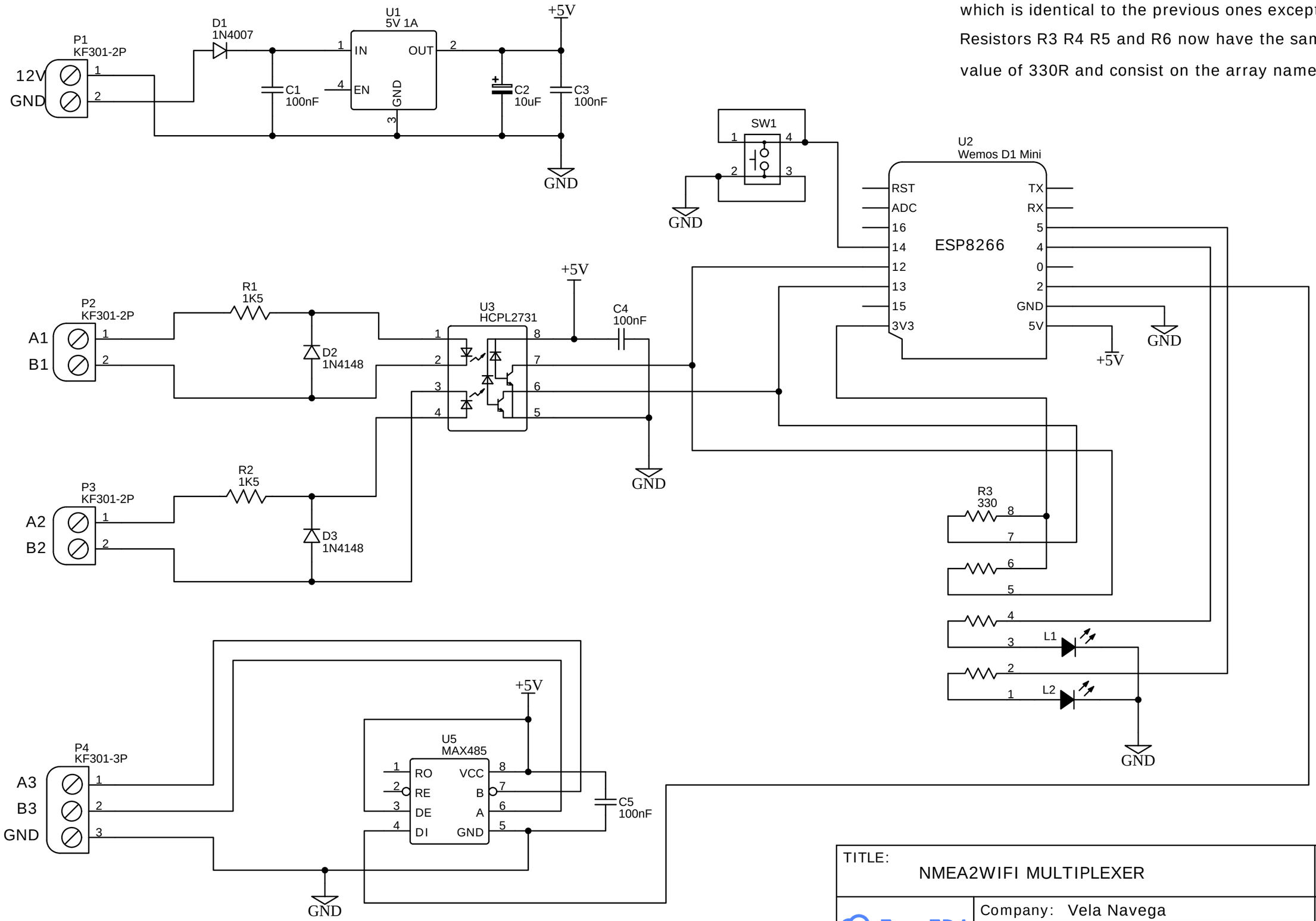

TITLE: NMEA2WIFI MULTIPLEXER		REV: 3.0
EasyEDA	Company: Vela Navega	Sheet: 1/1
	Date: 2019-10-23 Drawn By: Vladis	